LEAD BLOCKS CATALOGUE

Ocean Racers, Cruising and Metre Class Yachts

Timeless winches & fittings

ABSOLUTE

DECK LEAD BLOCK (SIZE 1 - 2)

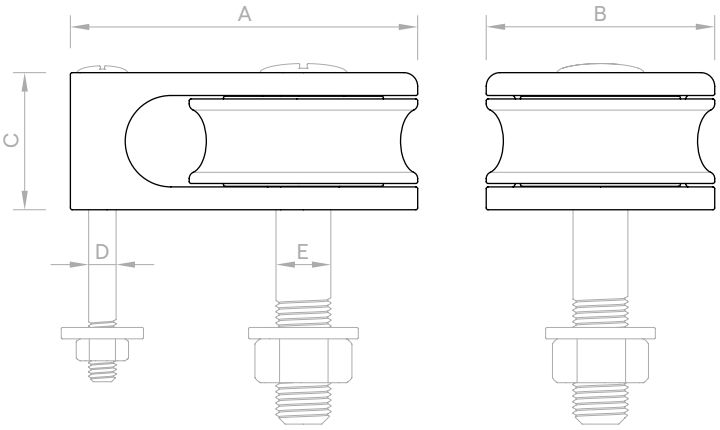

Our blocks and sheaves are manufactured from cast and extruded bronze. Optionally the sheaves can be supplied in aluminum with needle bearings.

Materials: bronze (CuSn5Pb5Zn5);

Finishes: polished bronze or chrome plated;

Part number	A mm	B Ø mm	C mm	D* M	E* M	Line Max. Ø mm
C001	76	50	30	M6 (x1)	M12 (x1)	14
C002	110	75	37	M8 (x1)	M16 (x1)	18

These are all aproximate measurements.
* Bolts are suplied with a standard lenght of 80mm. Other lenghts on special request.

Note: Images shown are indicative only.

DECK LEAD BLOCK (SIZE 3 - 4)

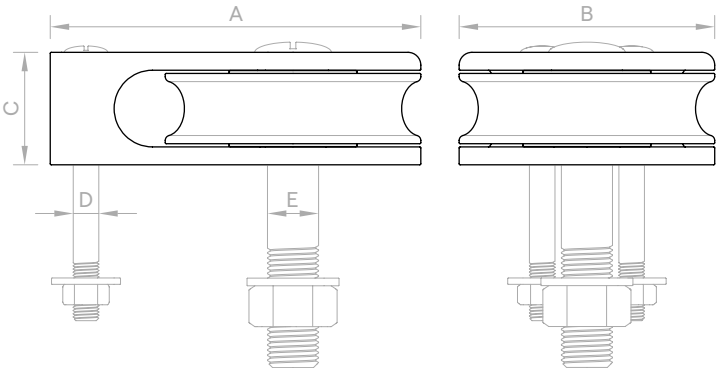

Our blocks and sheaves are manufactured from cast and extruded bronze. Optionally the sheaves can be supplied in aluminum with needle bearings.

Materials: bronze (CuSn5Pb5Zn5);

Finishes: polished bronze or chrome plated;

Part number	A mm	B Ø mm	C mm	D* M	E* M	Line Max. Ø mm
C003	145	100	44	M10 (x2)	M20 (x1)	22
C004	180	125	53	M12 (x2)	M25 (x1)	26

These are all aproximate measurements.
* Bolts are suplied with a standard lenght of 80mm. Other lenghts on special request.

Note: Images shown are indicative only.

DECK LEAD BLOCK (DOUBLE)

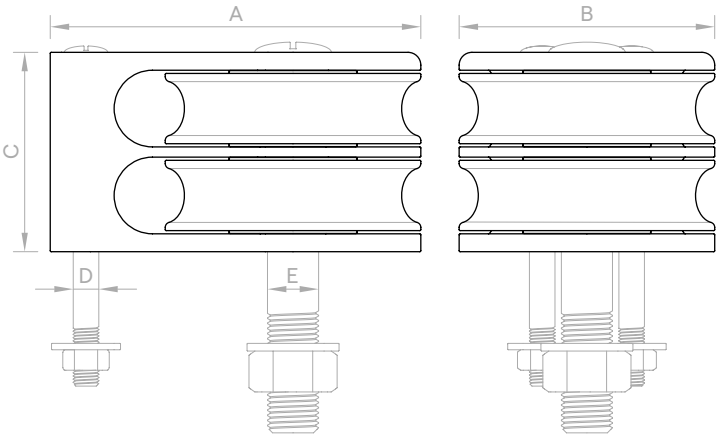

Our blocks and sheaves are manufactured from cast and extruded bronze. Optionally the sheaves can be supplied in aluminum with needle bearings.

Materials: bronze (CuSn5Pb5Zn5);

Finishes: polished bronze or chrome plated;

Part number	A mm	B Ø mm	C mm	D* M	E* M	Line Max. Ø mm
C005	145	100	78	M10 (x2)	M20 (x1)	22
C004	180	125	95	M12 (x2)	M25 (x1)	26

These are all aproximate measurements.
* Bolts are suplied with a standard lenght of 120mm. Other lenghts on special request.

Note: Images shown are indicative only.

SIDE LEAD BLOCK

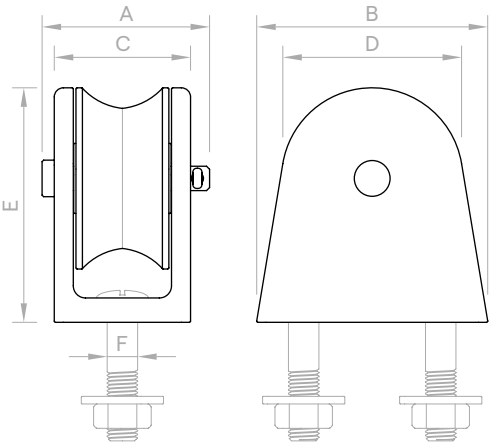

Our blocks and sheaves are manufactured from cast and extruded bronze. Optionally the sheaves can be supplied in aluminum with needle bearings.

Materials: bronze (CuSn5Pb5Zn5);

Finishes: polished bronze or chrome plated;

Part number	A mm	B mm	C mm	D Ø mm	E mm	F* M	Line Max. Ø mm
C005	55	76	45	60	77	M10 (x2)	16

These are all aproximate measurements.
* The fixing bolts are not included, they can be supplied if requested.

Note: Images shown are indicative only.

ABSOLUTE

Visit us at www.absolute-projects.com
contact@absolute-projects.com | 2021